GEARBOX TYPE: QSS-200-S

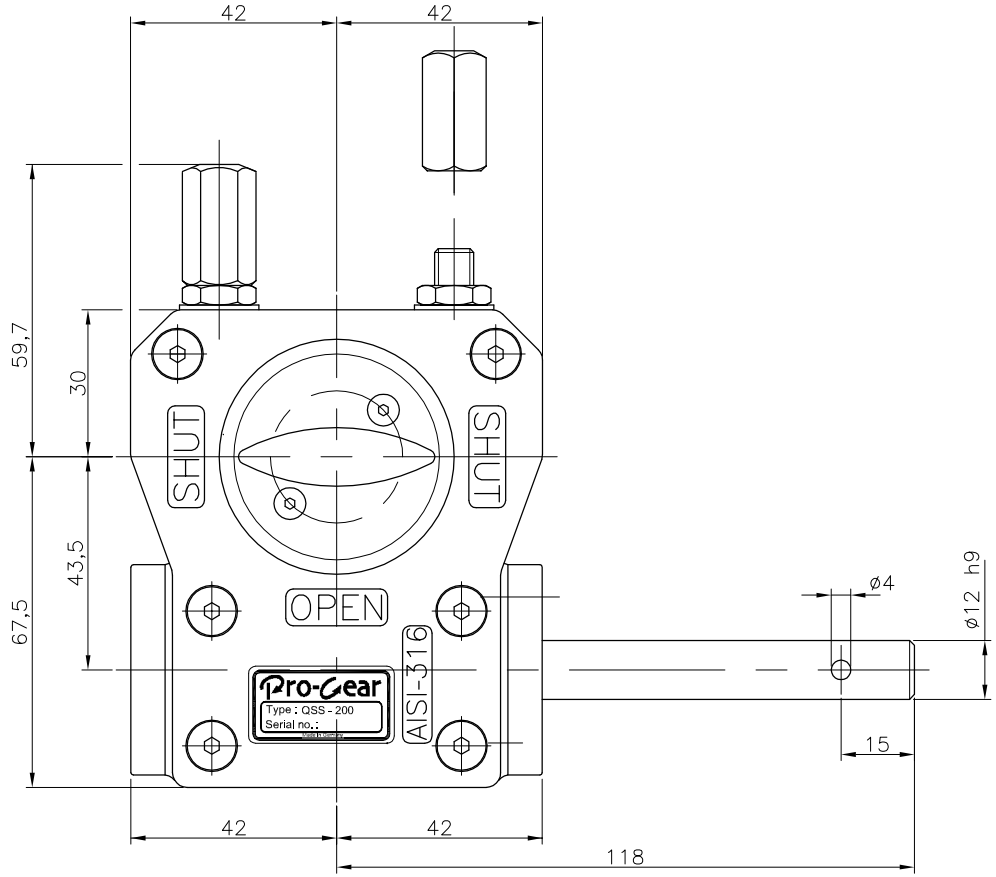

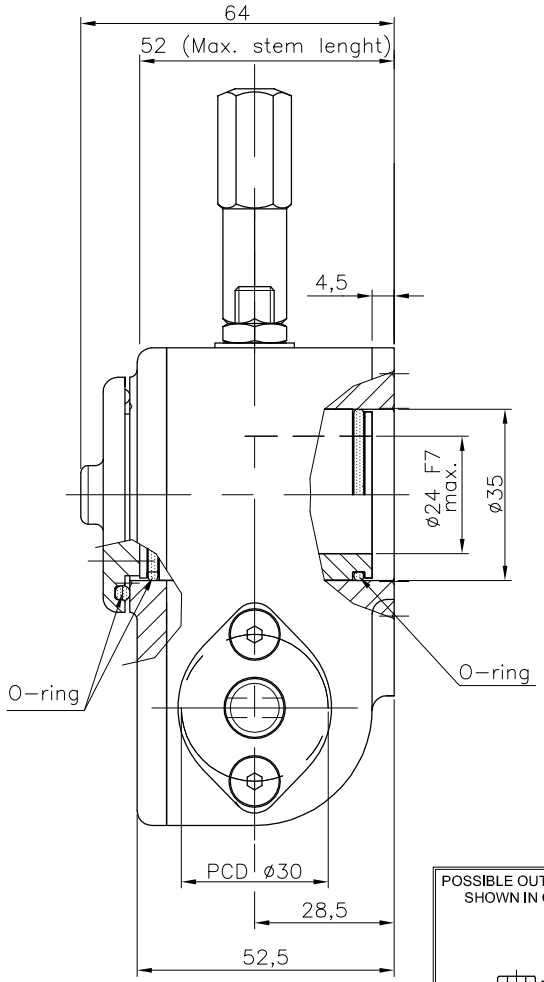

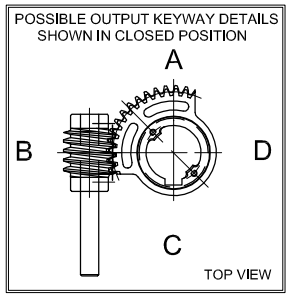

TECHNICAL DATA		
NAME	:	QSS-200 S
Travel	:	90° ±5° at both ends
RATIO	:	40 : 1 (quarter turn)
TURNS TO CLOSE	:	10
APPROX. WEIGHT	:	2.1 kg. (4.63lb.) excl. bore and handwheel
MAX. INPUT TORQUE	:	16.8Nm (12.39 lbf.ft.)
MAX. OUTPUT TORQUE	:	200 Nm (147.51lbf. ft.)
MECH. ADV.	:	11.9% (+/- 10%) (Values measured by fully loaded gearbox)

MOUNTING DETAILS			
BOLT CIRCLE	MIN.	:	ø50 [1.97] 4x M6 (F05)
	MAX.	:	ø70 [2.75] 4x M8 (F07)
BORE	MIN.	:	ø8.4 (pilot-bore) or []8.0 [0.31]
	MAX.	:	ø24 [0.94] or []17 [0.67]

No rights can be obtained from this drawing
Drawing can be changed without notice

Pro-Gear

dimension in MM.	Drawing number :	Revision :
Scale : none	DC-QSS-200-S-01	01

23-07-17

This document is property of PRO-GEAR GmbH. Neither this or its content may be copied or used in any other way detrimetal to the interest of PRO-GEAR, acceptance of this document shall constitute acknowledgement of the foregoing conditions