GEARBOX TYPE: QSS-2000-S

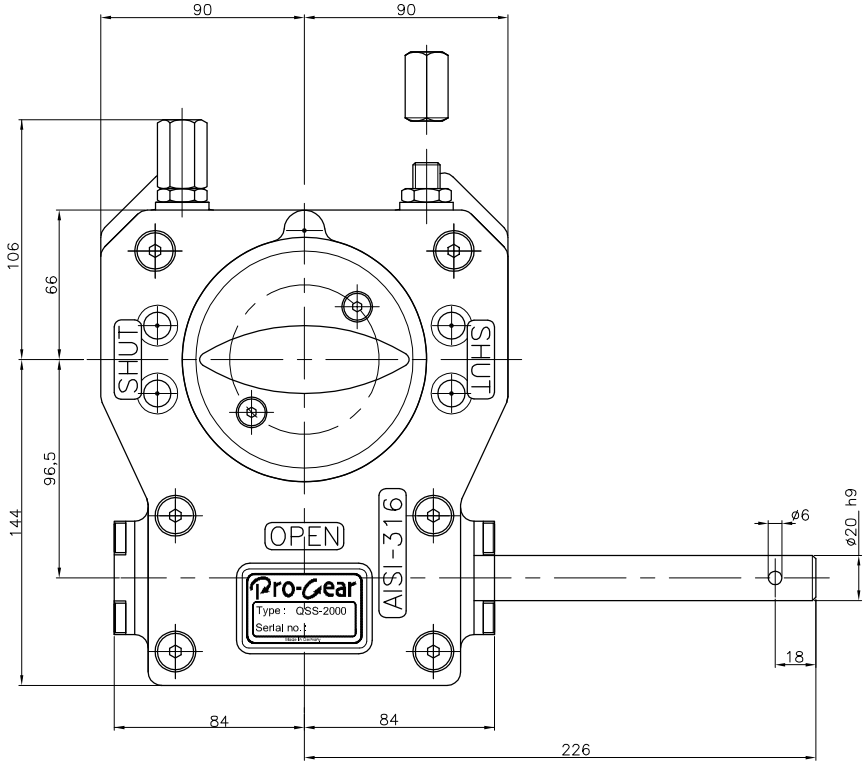

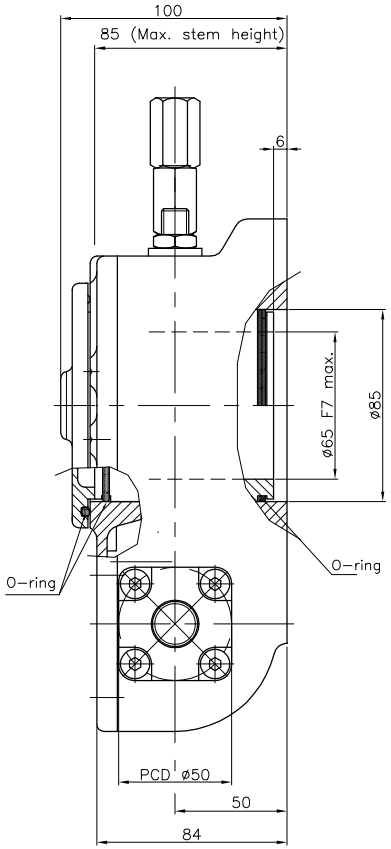

TECHNICAL DATA		
NAME	:	Q-SS 2000 S
Travel	:	90° ±5° at both ends
RATIO	:	48 : 1 (quarter turn)
TURNS TO CLOSE	:	12
APPROX. WEIGHT	:	16.3 kg. (36.00lb.) excl. bore and handwheel
MAX. INPUT TORQUE	:	131Nm (96.62 lbf.ft.)
MAX. OUTPUT TORQUE	:	2000 Nm (1475.12 lbf. ft.)
MECH. ADV.	:	15.3% (+/- 10%) (Values measured by fully loaded gearbox)

MOUNTING DETAILS			
BOLT CIRCLE	MIN.	:	ø102 [4.02] 4x M10 (F10)
	MAX.	:	ø165 [6.49] 4x M20 (F16)
BORE	MIN.	:	ø25 [0.98] (pilot-bore)
	MAX.	:	ø65 [2.55] or []40 [1.57]

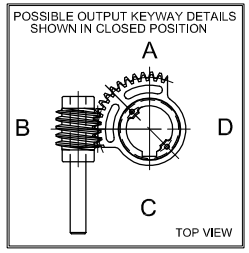

No rights can be obtained from this drawing
Drawing can be changed without notice

Pro-Gear	dimension in MM.	Drawing number :	Revision :
	Scale : none	DC-QSS-2000-S-01	02

This document is property of PRO-GEAR GmbH. Neither this or its content may be copied or used in any other way detrimetal to the interest of PRO-GEAR, acceptance of this document shall constitute acknowledgement of the foregoing conditions